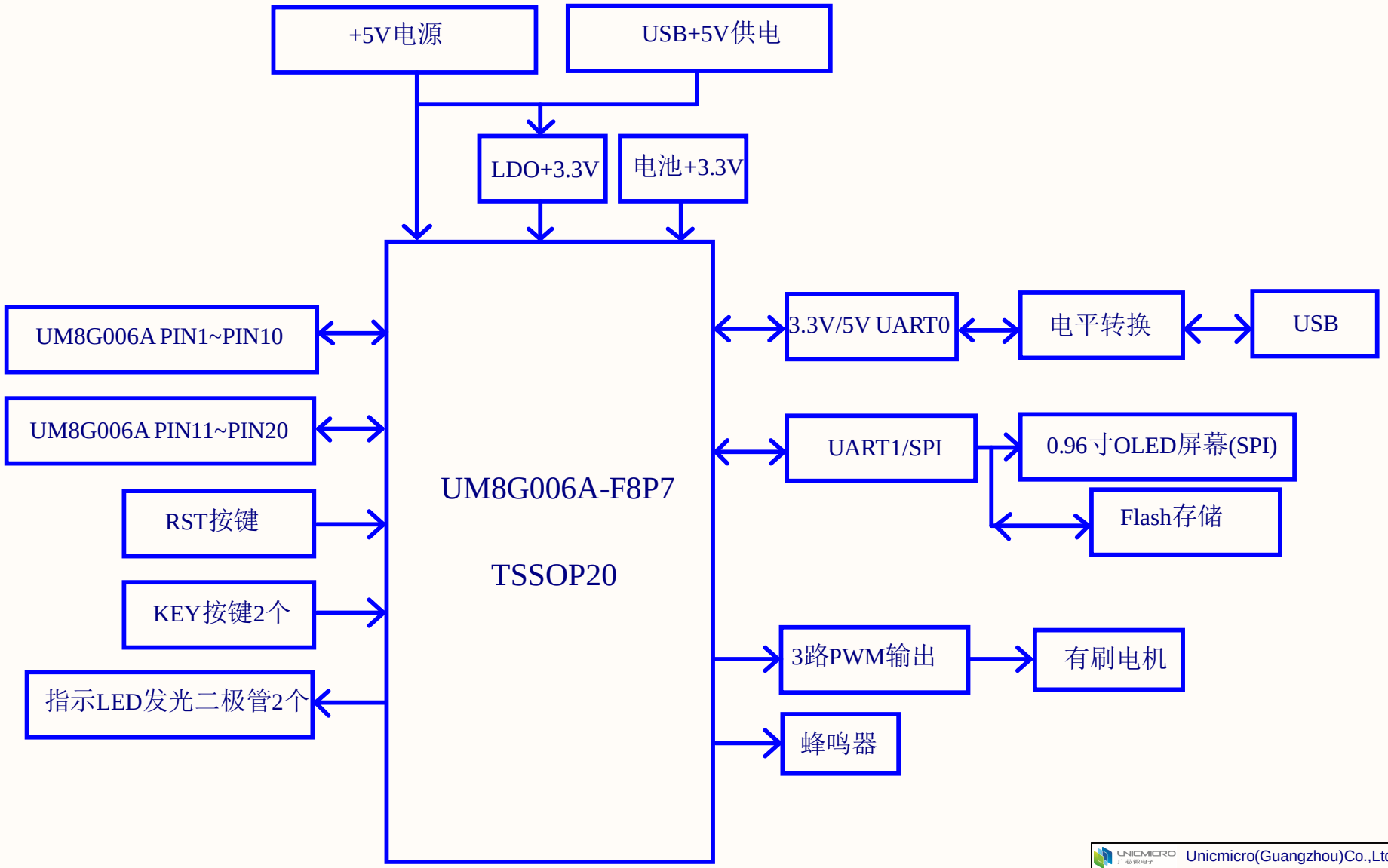

Unicmicro(Guangzhou)Co.,Ltd.			
Project:	UM8G006A_TSSOP20_EVB		
Page:	01.BLOCK		
Date:	2025/5/6	Rev:	1.1
Designed By:	CIMI	Sheet:	1 of 3

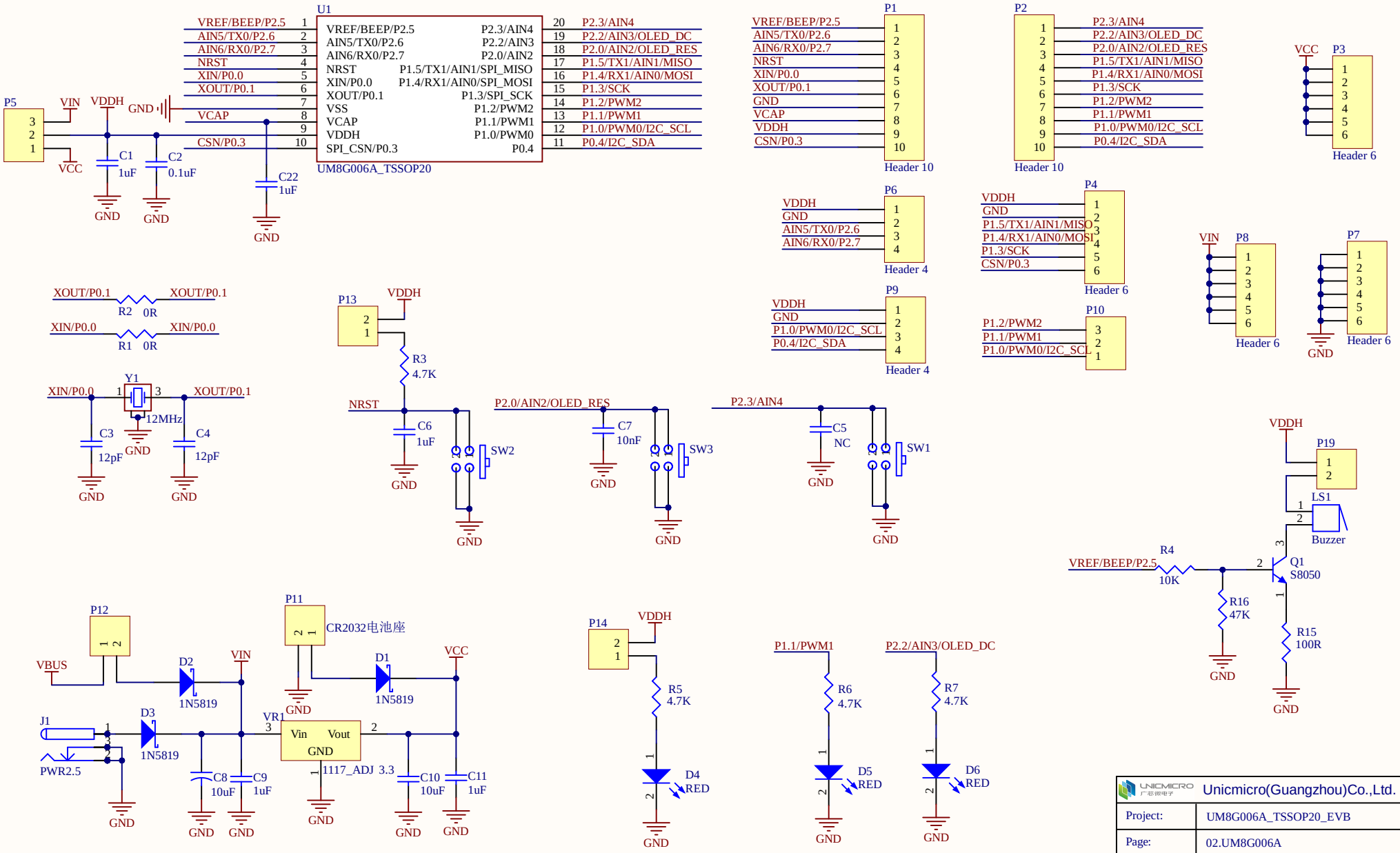

Unicmicro(Guangzhou)Co.,Ltd.			
Project:	UM8G006A_TSSOP20_EVB		
Page:	02.UM8G006A		
Date:	2025/5/6	Rev:	1.1
Designed By:	CIMI	Sheet:	2 of 3

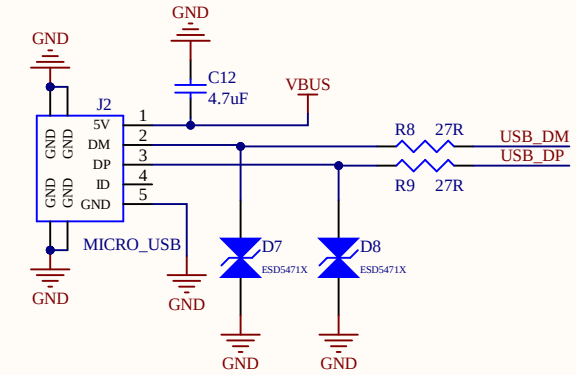

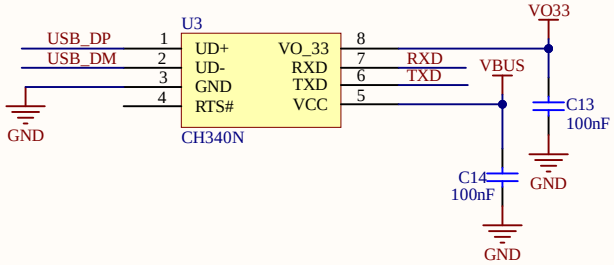

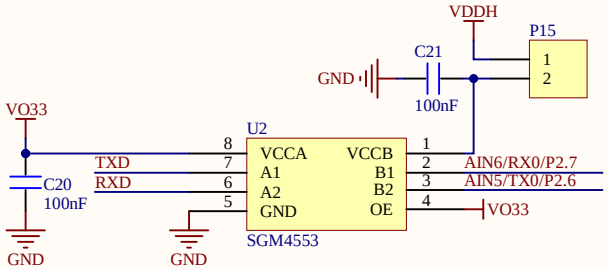

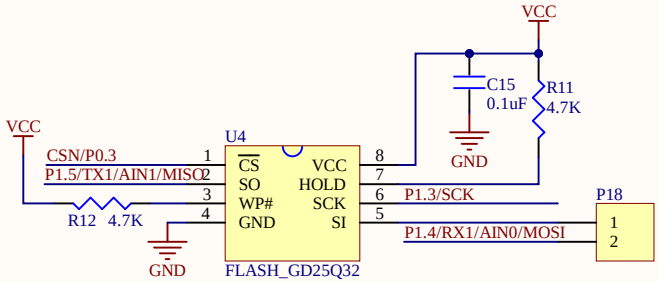

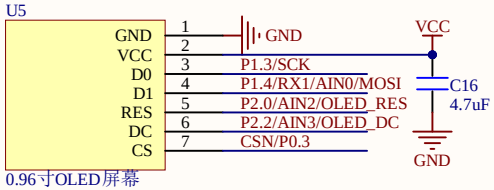

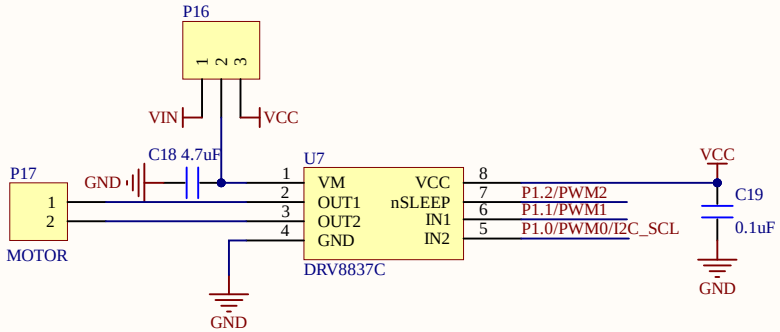

Unicmicro(Guangzhou)Co.,Ltd.			
Project:	UM8G006A_TSSOP20_EVB		
Page:	03. Peripheral		
Date:	2025/5/6	Rev:	1.1
Designed By:	CIMI	Sheet:	3 of 3