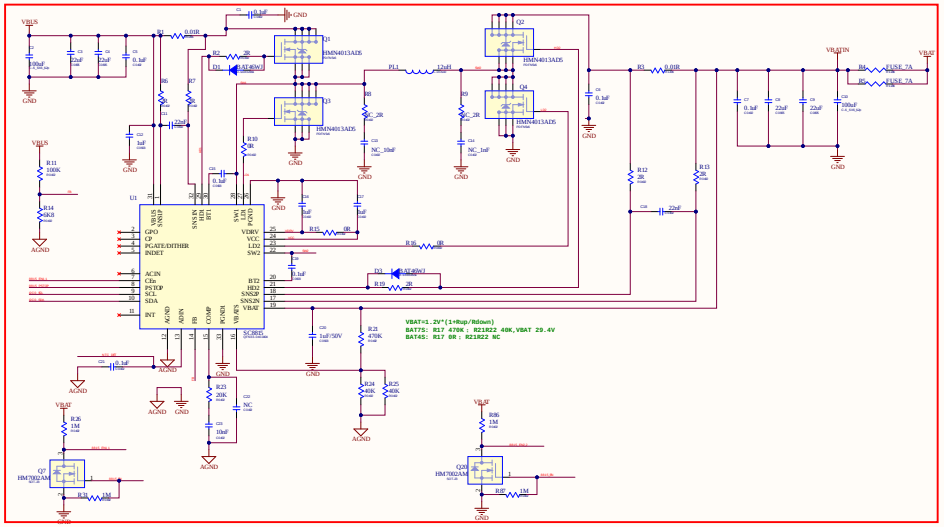
VBAT=1.2V*(1+Rup/Rdown)
BAT75: R17 470K : R21R22 40K,VBAT 29.4V
BAT45: R17 0R : R21R22 NC

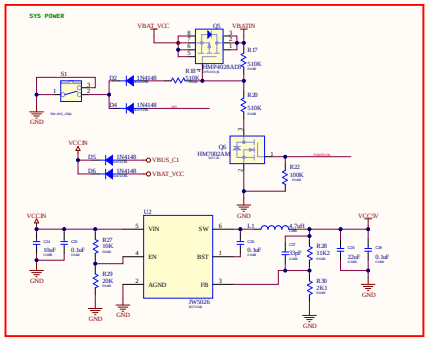
SYS POWER

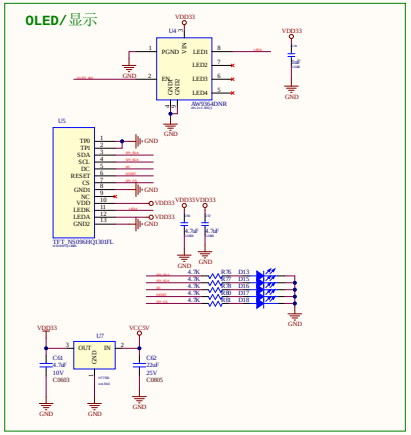
OLED/显示

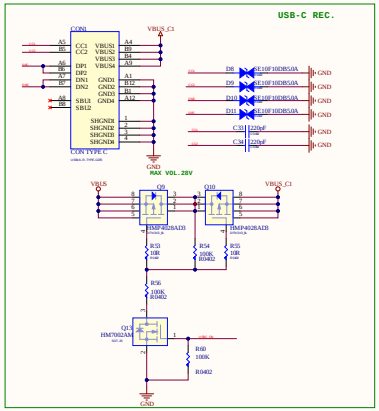
USB-C REC.
MAX VOL.28V

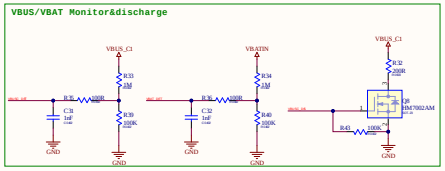
VBUS/VBAT Monitor&discharge

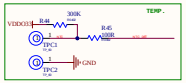
TEMP.

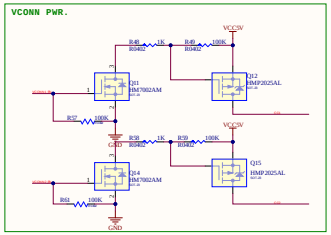
VCONN PWR.

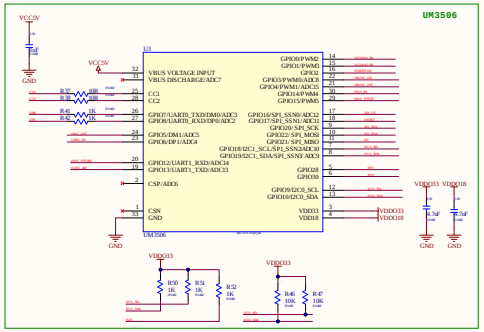
UM3506


BB15_ENZ_2
VCC5V
VBATIN
GND
BB15_PSTOP2
I2C1_SDA
INTn
I2C1_SCL
VCC_IN