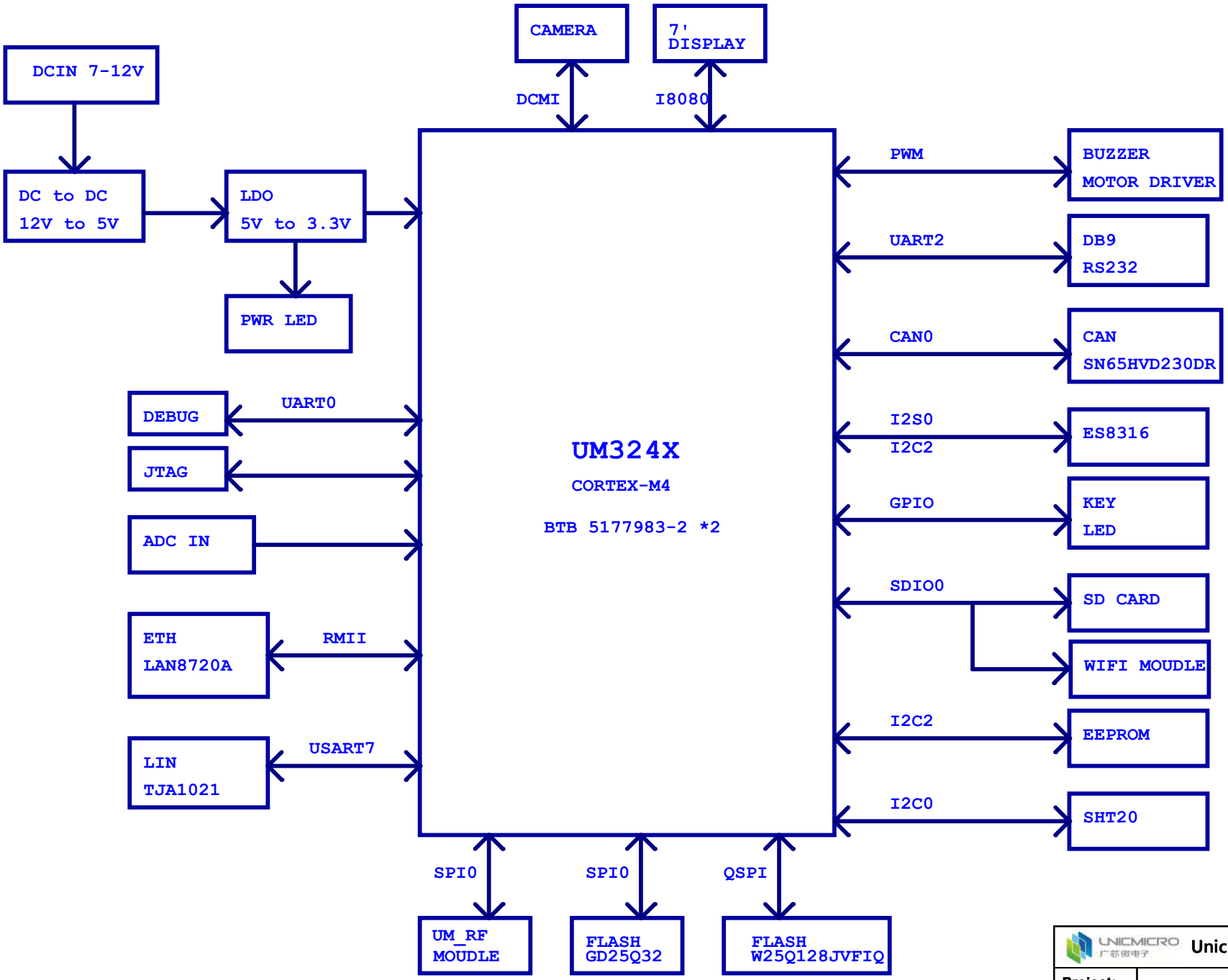

Unicmicro(Guangzhou)Co.,Ltd.			
Project:	UM324X_EVB_PLUS_SCH_V02_20230112		
Page:	01. BLOCK DIAGRAM		
Date:	Tuesday, April 18, 2023	Rev:	V01
Designed by:	CIMI	Sheet:	1 of 13

Version	Date	Author	Change Note	Approved
V01	20221010	CIMI	First editor	
V02	20230223	CIMI	Changed circuit of LIN.	

Unicmicro(Guangzhou)Co.,Ltd.			
Project:	UM324X_EVB_PLUS_SCH_V02_20230112		
Page:	02.Change List		
Date:	Tuesday, April 18, 2023	Rev:	V01
Designed by:	CIMI	Sheet:	2 of 13

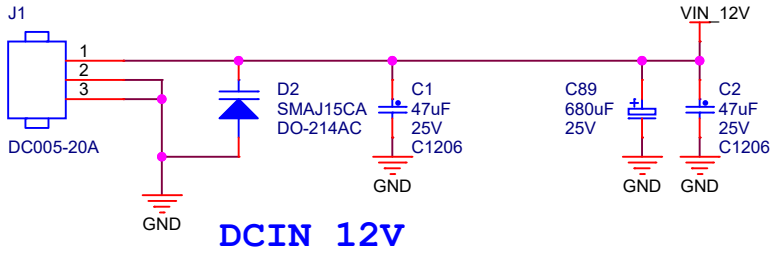

DCIN 12V

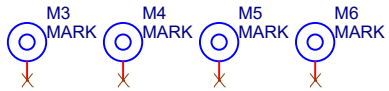

MARK

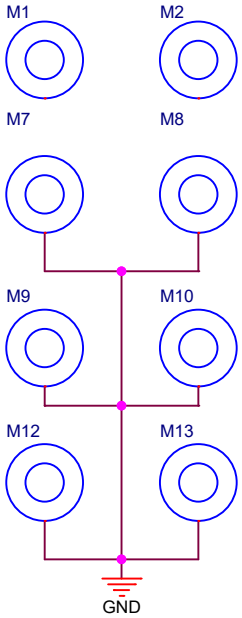

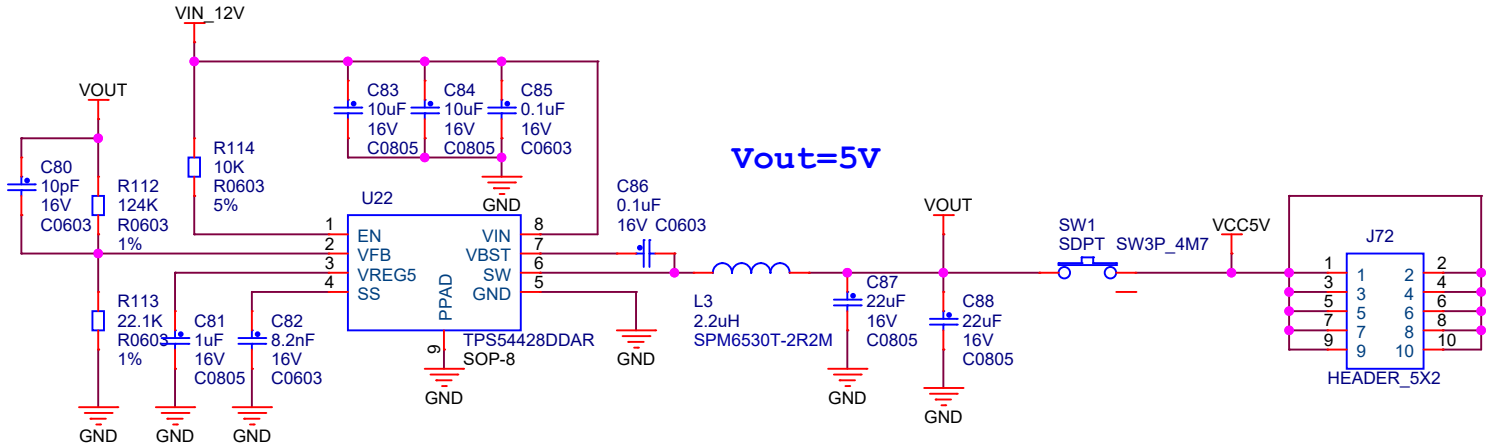

Vout=5V

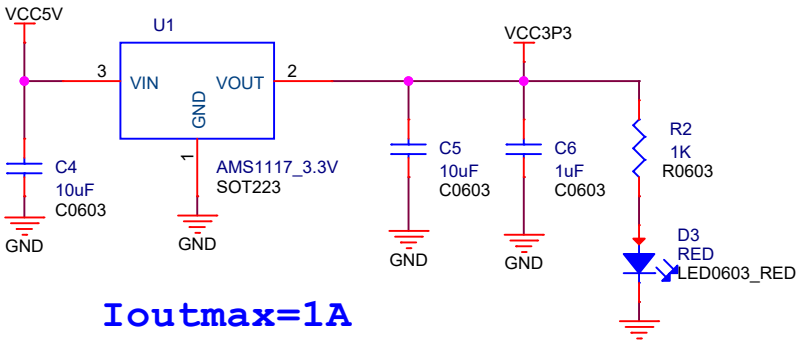

Ioutmax=1A

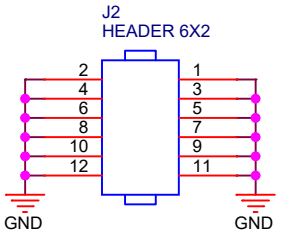

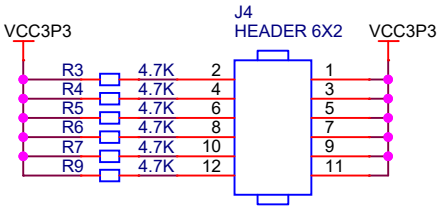

Unicmicro(Guangzhou)Co.,Ltd.			
Project:	UM324X_EVB_PLUS_SCH_V02_20230112		
Page:	03. SYSTEM POWER		
Date:	Tuesday, April 18, 2023	Rev:	V01
Designed by:	CIMI	Sheet:	3 of 13

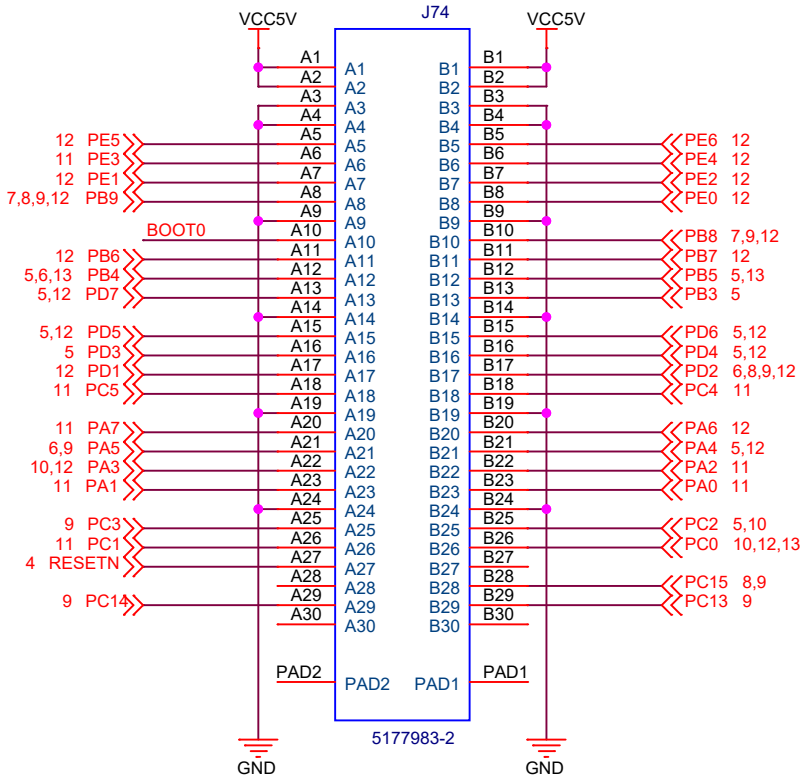

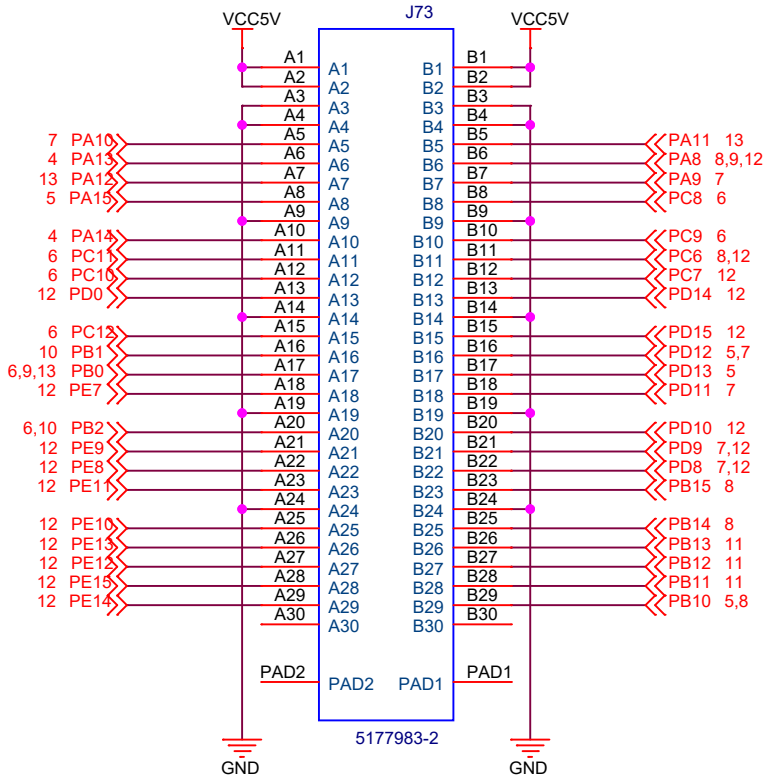

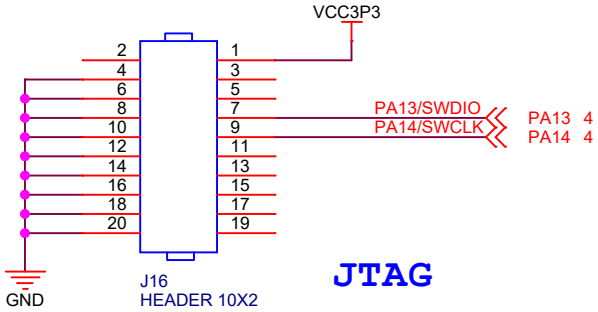

JTAG

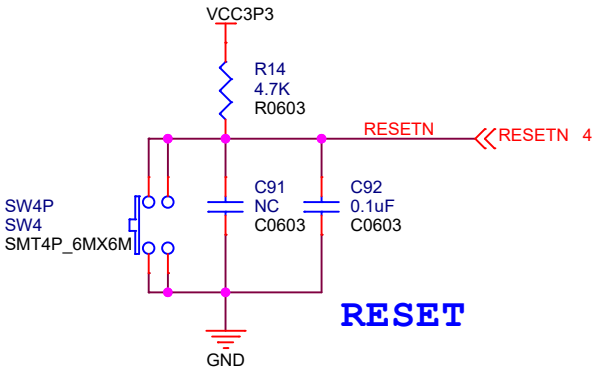

RESET

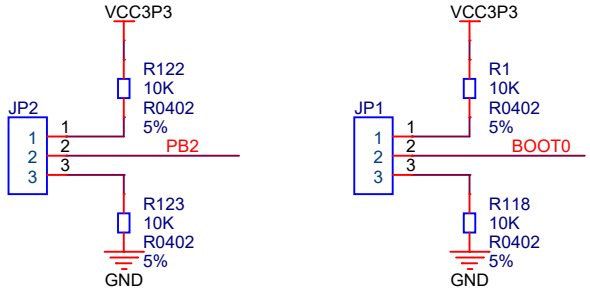

BOOT

Unicmicro(Guangzhou)Co.,Ltd.	
Project:	UM324X_EVB_PLUS_SCH_V02_20230112
Page:	04. UM324X
Date: Tuesday, April 18, 2023	Rev: V01
Designed by: CIMI	Sheet: 4 of 13

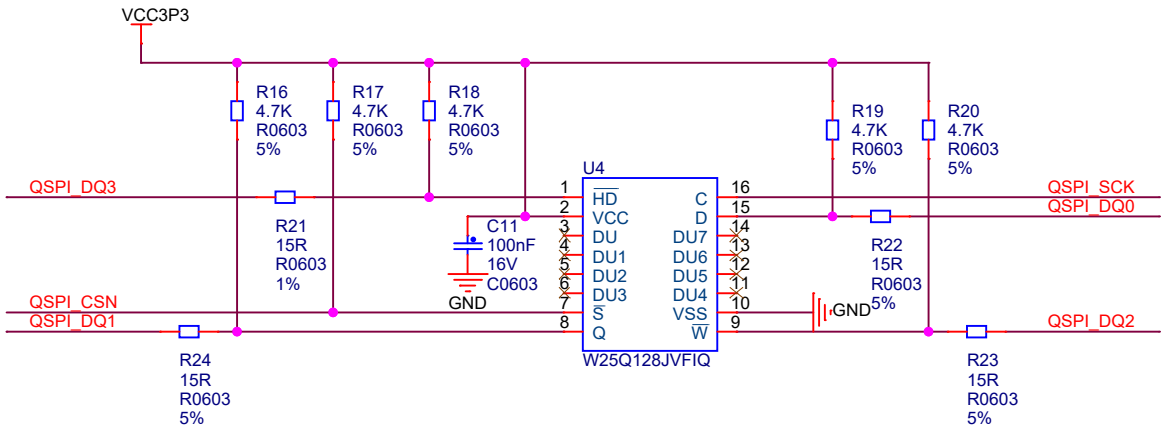

QSPI NOR FLASH

SPI0_CS PA15 4
SPI0_SCK PB3 4
SPI0_MISO PB4 4,6,13
SPI0_MOSI PB5 4,13

QSPI_SCK PB10 4,8
QSPI_CSN PD3 4,5
QSPI_DQ0 PD4 4,12
QSPI_DQ1 PD5 4,12
QSPI_DQ2 PD6 4,12
QSPI_DQ3 PD7 4,12

UMM_CS PA4 4,12
nIRQ PD12 4,7
GPIO1 PD13 4
GPIO2 PD3 4,5
SDN PC2 4,10

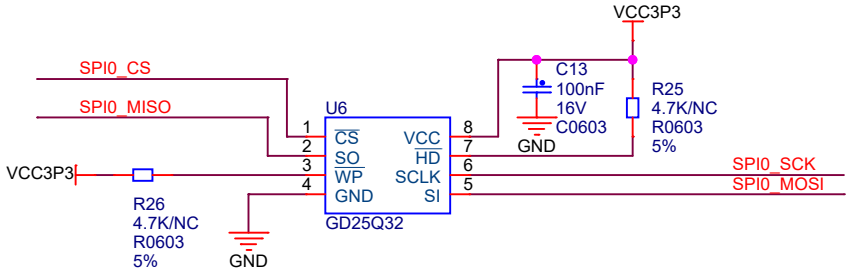

SPI FLASH

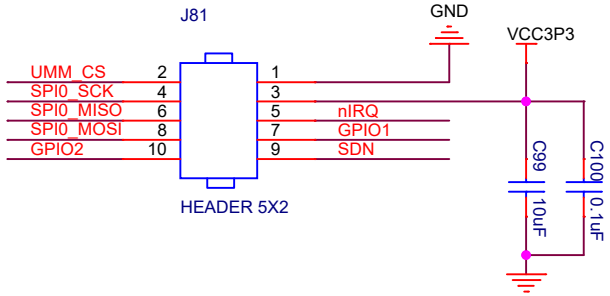

Connecter for UM2xxx Module

Unicmicro(Guangzhou)Co.,Ltd.			
Project:	UM324X_EVB_PLUS_SCH_V02_20230112		
Page:	05. SPI		
Date:	Tuesday, April 18, 2023	Rev:	V01
Designed by:	CIMI	Sheet:	5 of 13

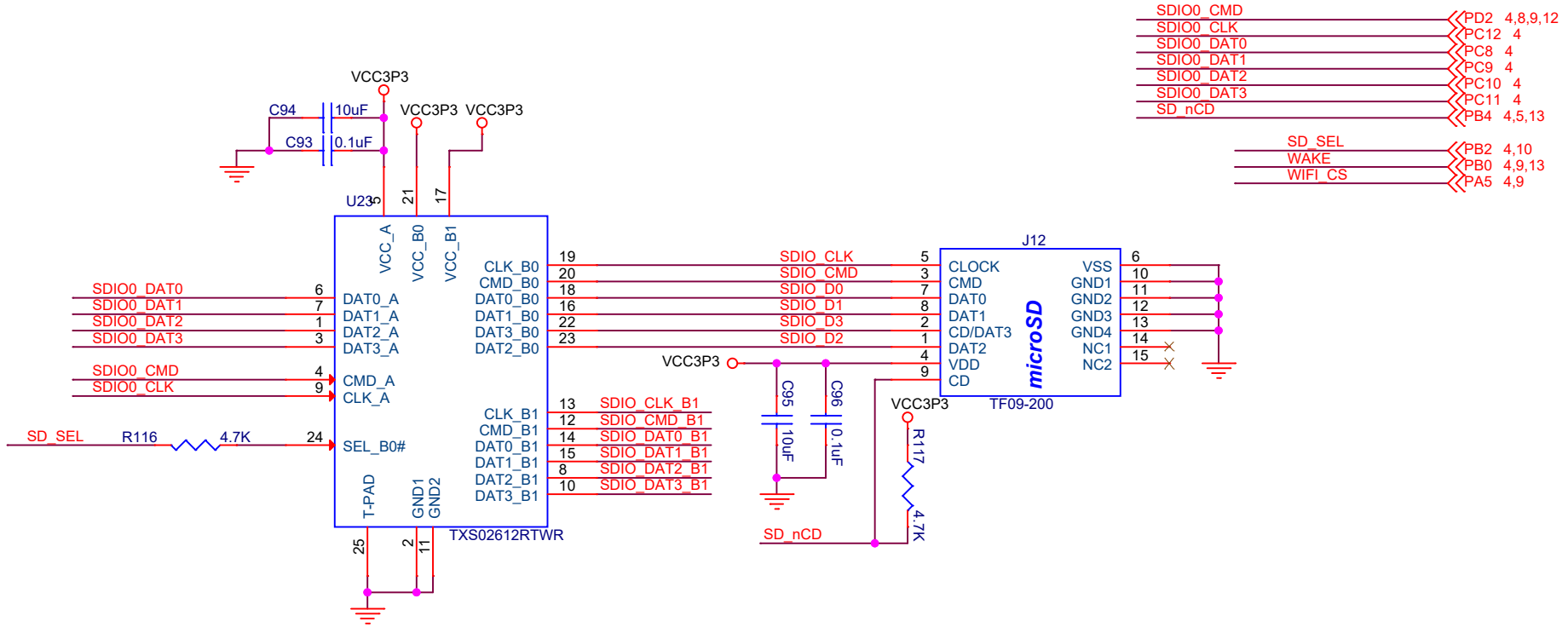

Micro SD Card

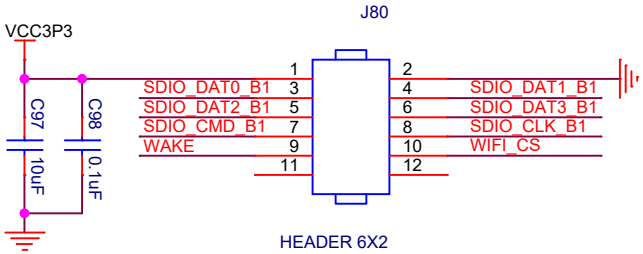

SDIO WIFI MOUDLE

Unicmicro(Guangzhou)Co.,Ltd.			
Project:	UM324X_EVB_PLUS_SCH_V02_20230112		
Page:	06. SDIO		
Date:	Tuesday, April 18, 2023	Rev:	V01
Designed by:	CIMI	Sheet:	6 of 13

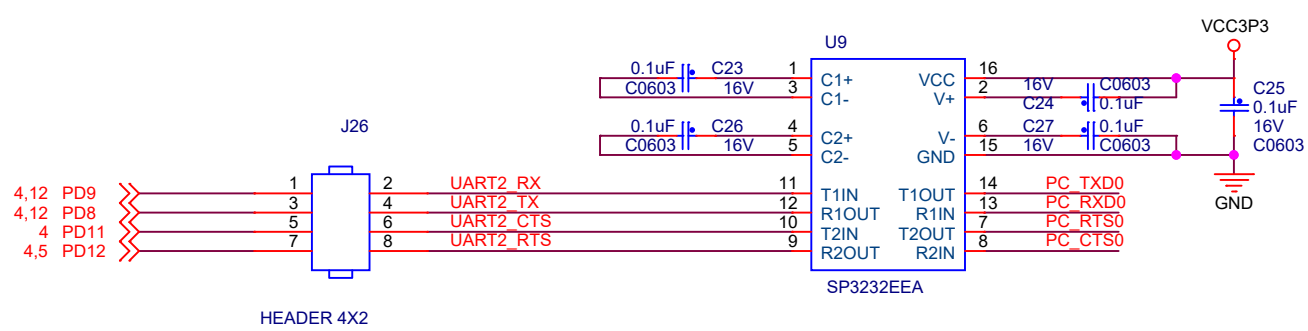

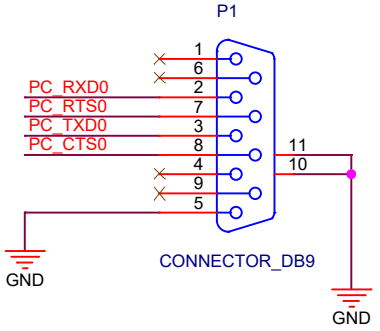

UART TO RS232

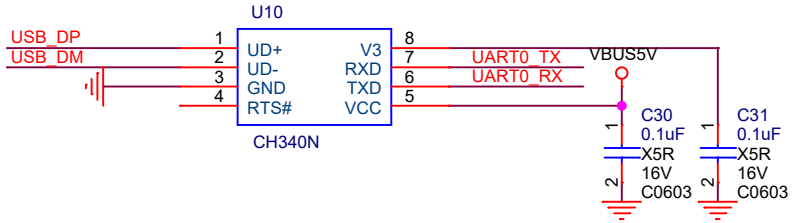

UART TO USB

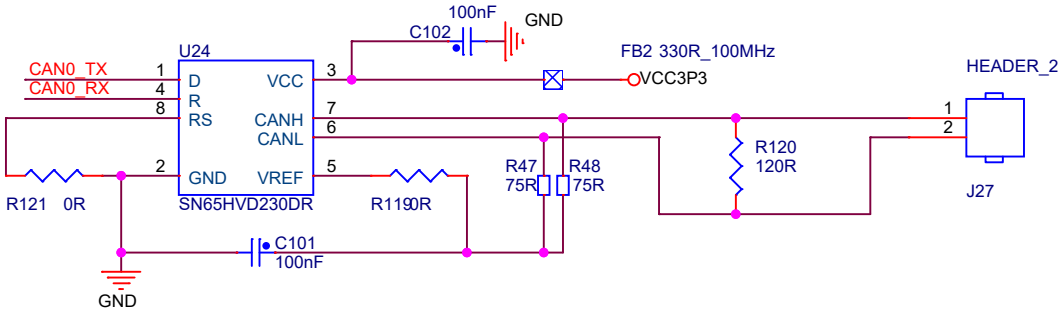

CAN

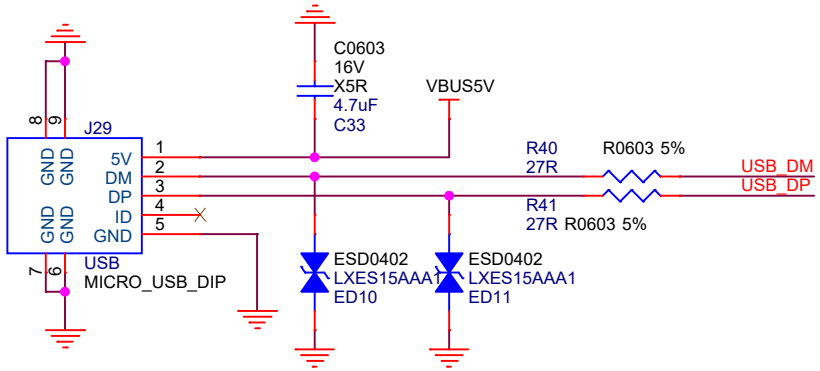

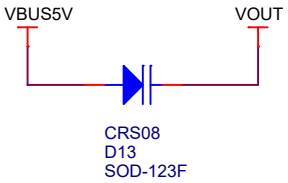

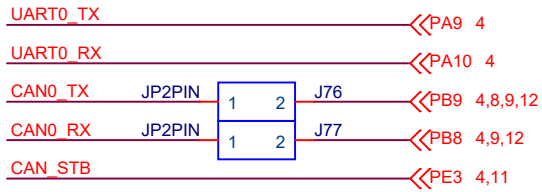

Unicmicro(Guangzhou)Co.,Ltd.	
Project:	UM324X_EVB_PLUS_SCH_V02_20230112
Page:	07. UART & CAN
Date: Tuesday, April 18, 2023	Rev: V01
Designed by: CIMI	Sheet: 7 of 13

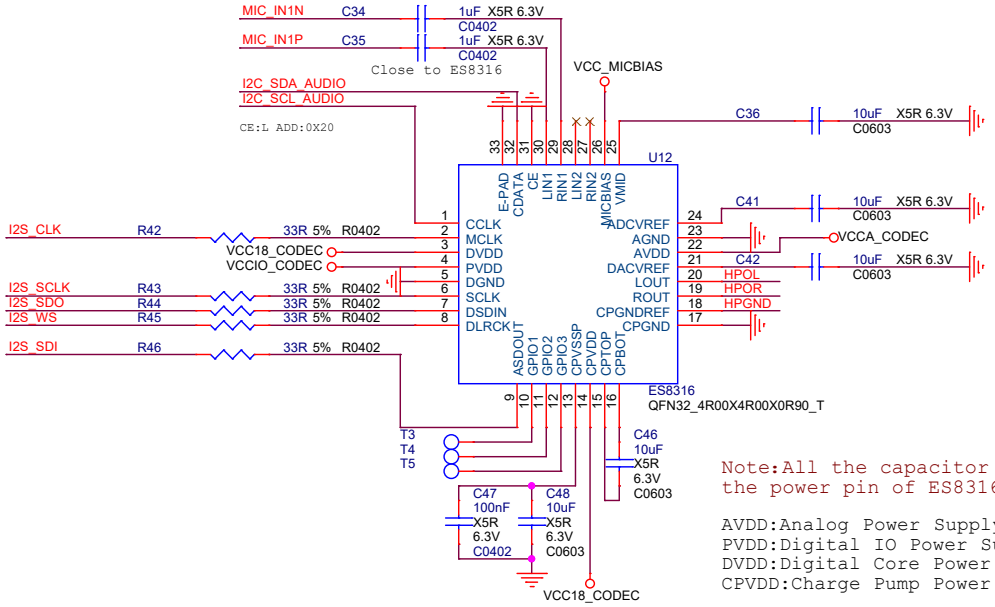

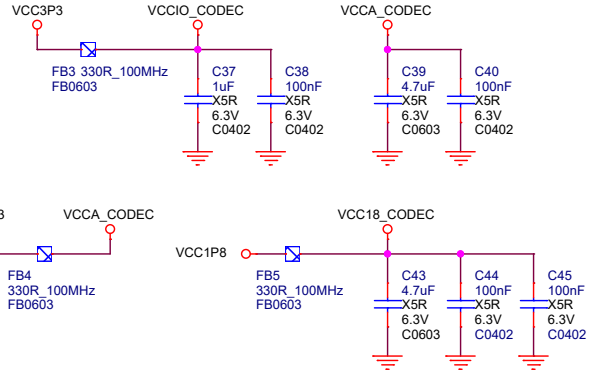

Note:All the capacitor should be place close to the power pin of ES8316。

AVDD:Analog Power Supply(1.6-3.3V)Recommend:3.3V
PVDD:Digital IO Power Supply(1.6-3.3V)Recommend:1.8V
DVDD:Digital Core Power Supply(1.6-3.3V)Recommend:1.8V
CPVDD:Charge Pump Power Supply(1.6-2.0V)Recommend:1.8V

CODEC ES8316

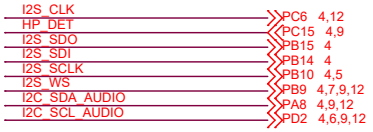

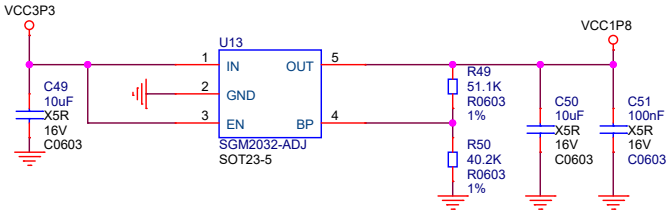

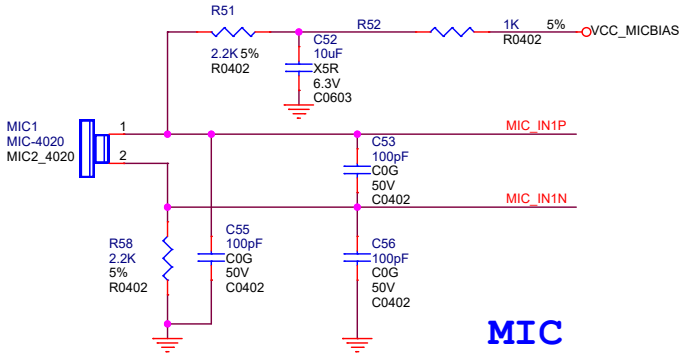

MIC

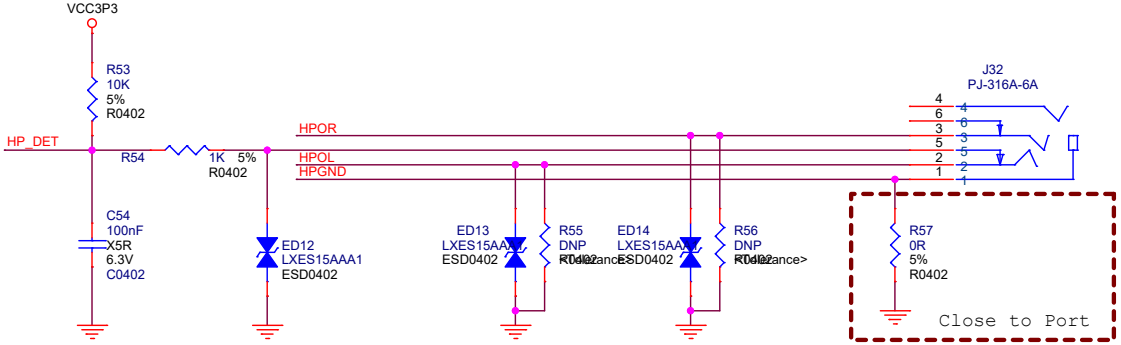

Ear Phone

Unicmicro(Guangzhou)Co.,Ltd.			
Project:	UM324X_EVB_PLUS_SCH_V02_20230112		
Page:	08. I2S CODEC		
Date:	Tuesday, April 18, 2023	Rev:	V01
Designed by:	CIMI	Sheet:	8 of 13

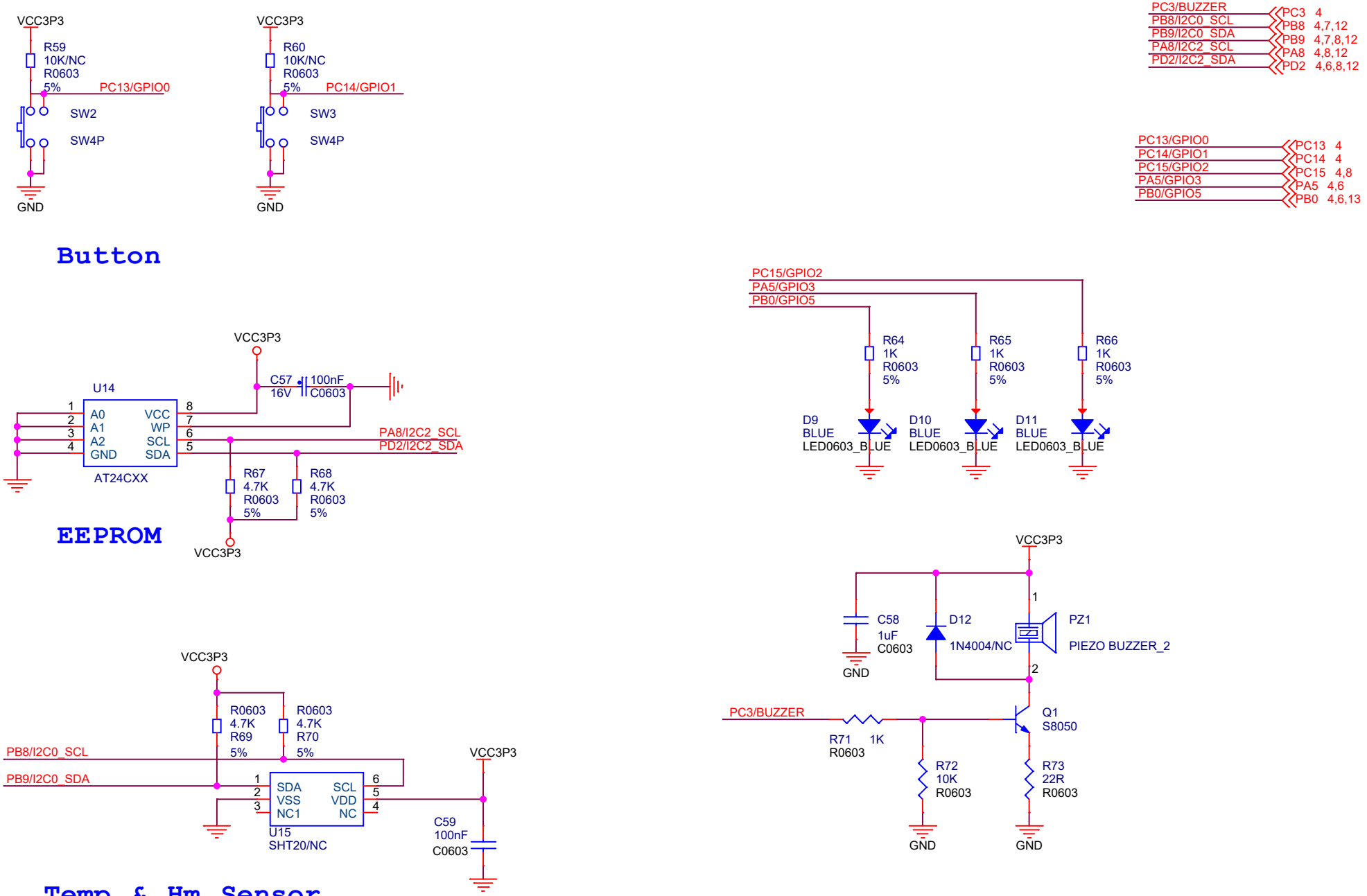

Unicmicro(Guangzhou)Co.,Ltd.			
Project:	UM324X_EVB_PLUS_SCH_V02_20230112		
Page:	9. GPIO & I2C		
Date:	Tuesday, April 18, 2023	Rev:	V01
Designed by:	CIMI	Sheet:	9 of 13

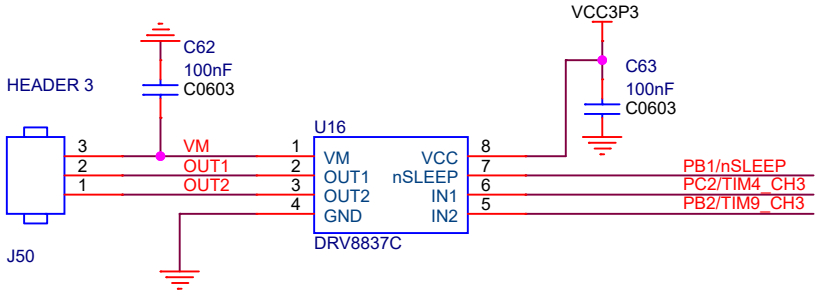

PWM Driver



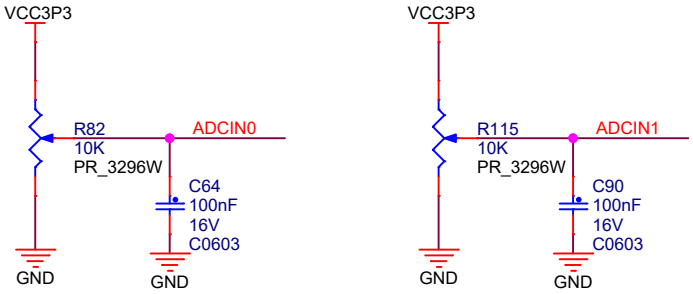

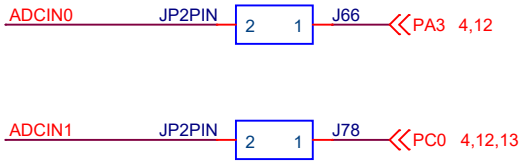

ADCIN

Unicmicro(Guangzhou)Co.,Ltd.			
Project:	UM324X_EVB_PLUS_SCH_V02_20230112		
Page:	10. PWM & ADC		
Date:	Tuesday, April 18, 2023	Rev:	V01
Designed by:	CIMI	Sheet:	10 of 13

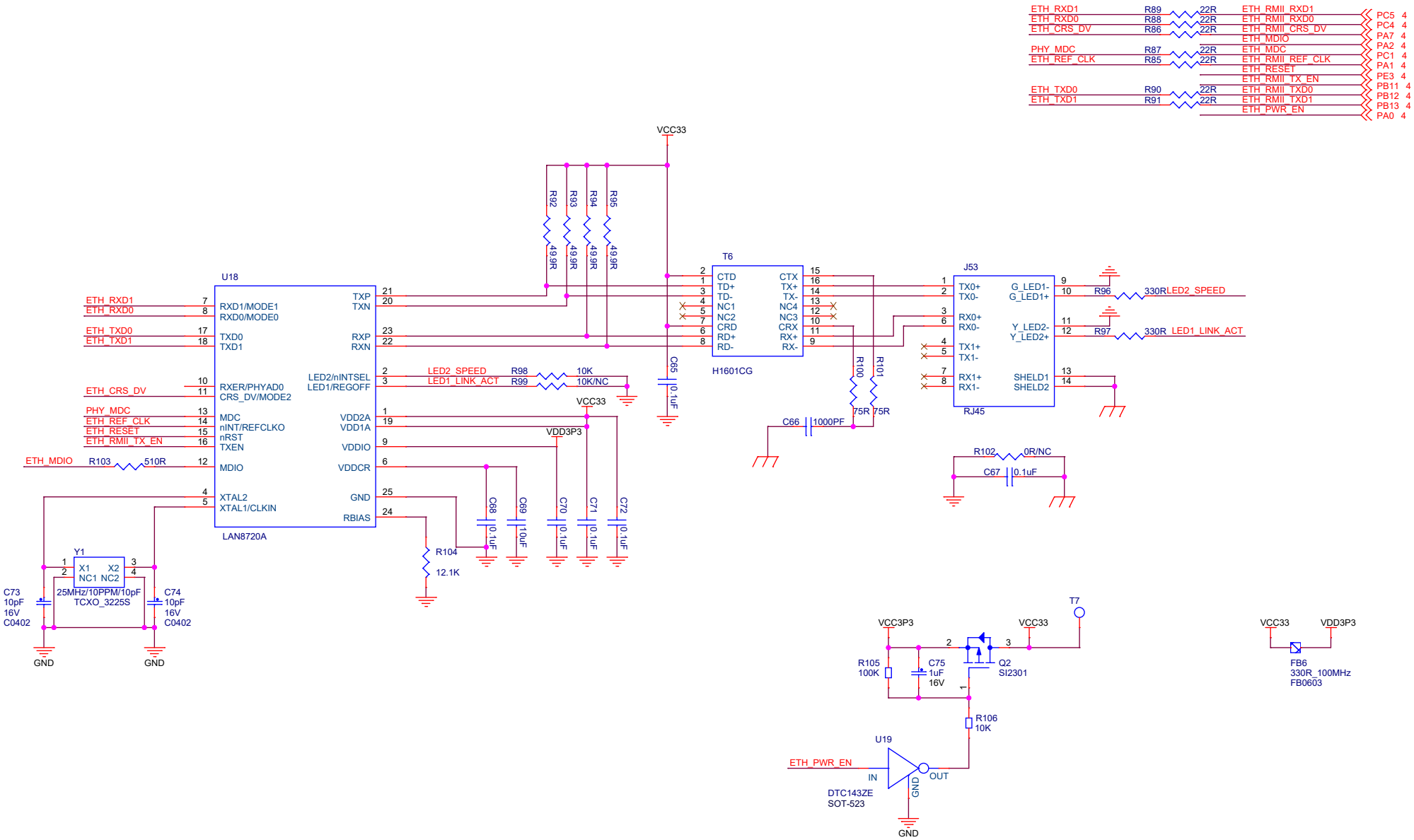

Unicmicro(Guangzhou)Co.,Ltd.			
Project:	UM324X_EVB_PLUS_SCH_V02_20230112		
Page:	11. 10/100M PHY		
Date:	Tuesday, April 18, 2023	Rev:	V01
Designed by:	CIMI	Sheet:	11 of 13

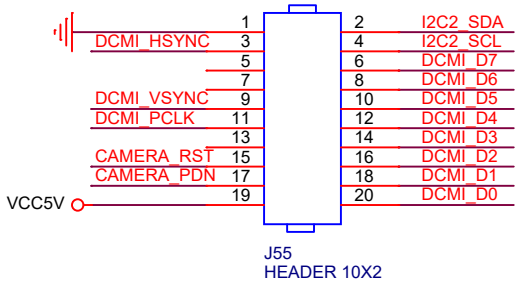

J55
HEADER 10X2

CAMERA

I2C2_SDA — PD2 4,6,8,9
I2C2_SCL — PA8 4,8,9
DCMI_D7 — PE6 4
DCMI_D6 — PE5 4
DCMI_D5 — PB6 4
DCMI_D4 — PE4 4
DCMI_D3 — PE1 4
DCMI_D2 — PE0 4
DCMI_D1 — PC7 4
DCMI_D0 — PC6 4,8
DCMI_HSYNC — PA4 4,5
DCMI_VSYNC — PB7 4
DCMI_PCLK — PA6 4
CAMERA_RST — PC14 4
CAMERA_PDN — PC13 4

V02

HEADER 32

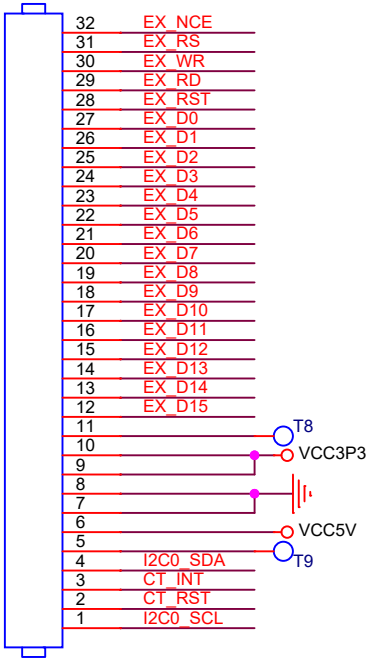

J75

7' LCD

I2C0_SCL — PB8 4,7,9
I2C0_SDA — PB9 4,7,8,9
CT_RST — PA3 4,10
CT_INT — PC0 4,10,13

EX_NCE — PD7 4,5
EX_RS — PD6 4,5
EX_WR — PD5 4,5
EX_RD — PD4 4,5
EX_RST — PE2 4
EX_D0 — PD14 4
EX_D1 — PD15 4
EX_D2 — PD0 4
EX_D3 — PD1 4
EX_D4 — PE7 4
EX_D5 — PE8 4
EX_D6 — PE9 4
EX_D7 — PE10 4
EX_D8 — PE11 4
EX_D9 — PE12 4
EX_D10 — PE13 4
EX_D11 — PE14 4
EX_D12 — PE15 4
EX_D13 — PD8 4,7
EX_D14 — PD9 4,7
EX_D15 — PD10 4

Unicmicro(Guangzhou)Co.,Ltd.			
Project:	UM324X_EVB_PLUS_SCH_V02_20230112		
Page:	12. CAMERA & LCD		
Date:	Tuesday, April 18, 2023	Rev:	V01
Designed by:	CIMI	Sheet:	12 of 13

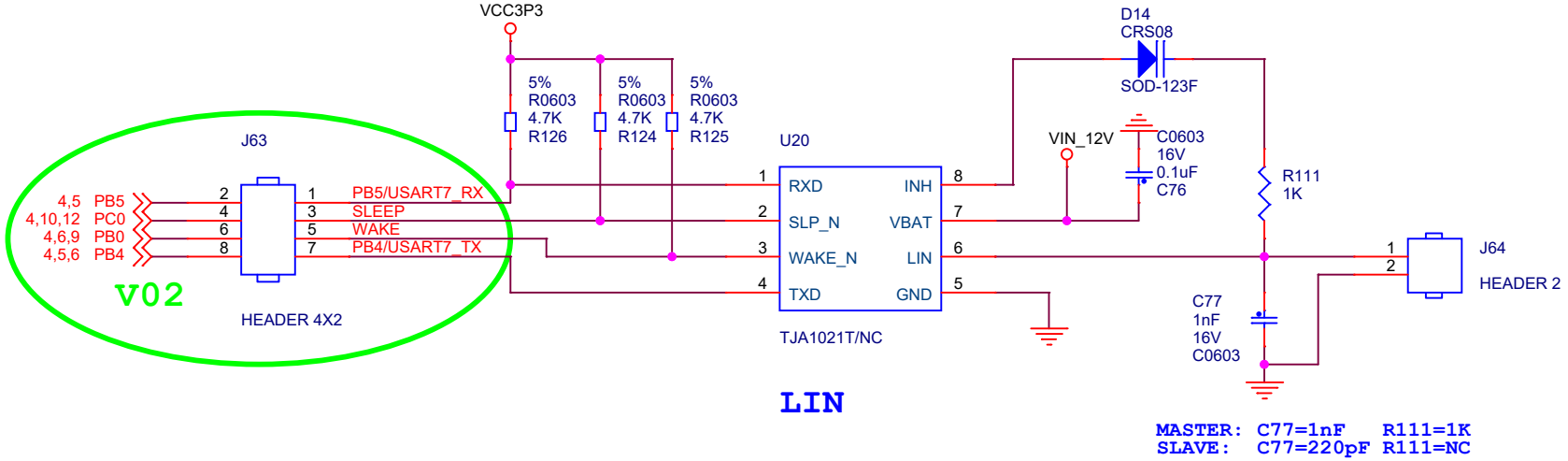

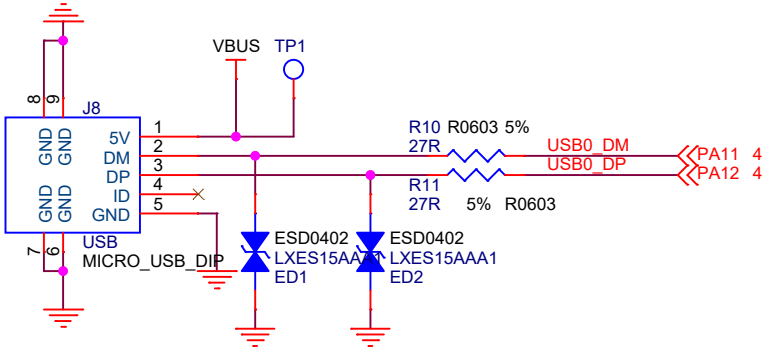

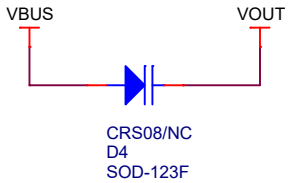

Unicmicro(Guangzhou)Co.,Ltd.			
Project:	UM324X_EVB_PLUS_SCH_V02_20230112		
Page:	13. LIN & USB		
Date:	Tuesday, April 18, 2023	Rev:	V01
Designed by:	CIMI	Sheet:	13 of 13